Home Appliance Automation using IoT

by
LELIS, KATHRYNA

CPE162P-4_E01
EMBEDDED SYSTEM WITH IOT

MAPÚA UNIVERSITY

Objective

Objective Overview:

- **To demonstrate how an a home appliance automation using IoT works.**
- **To be able apply what you have learned in logic circuits and switching theory, microprocessors, CPE160P, and CPE161P.**
- **To be able to apply embedded system with IoT using Arduino kit**
- **To be able to use Thingspeak for the data collection and analysis.**

MAPÚA UNIVERSITY

Materials

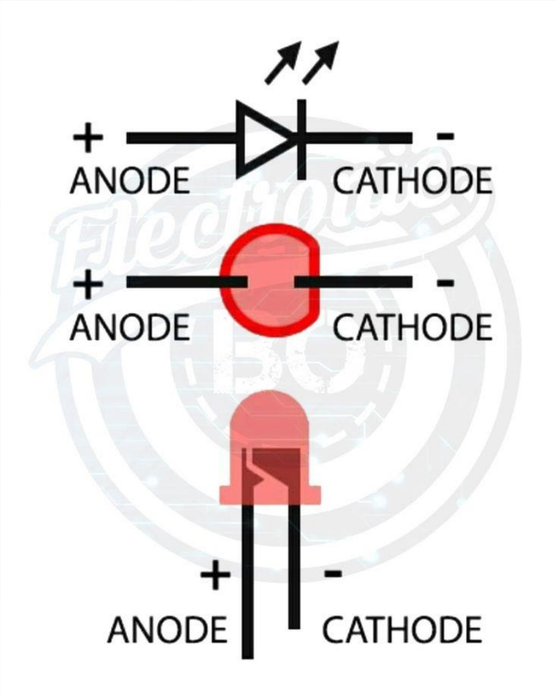

led

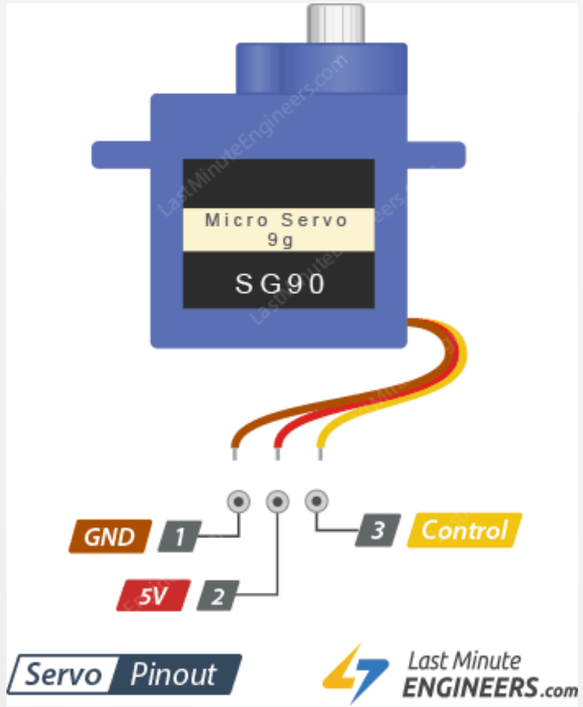

Micro Servo

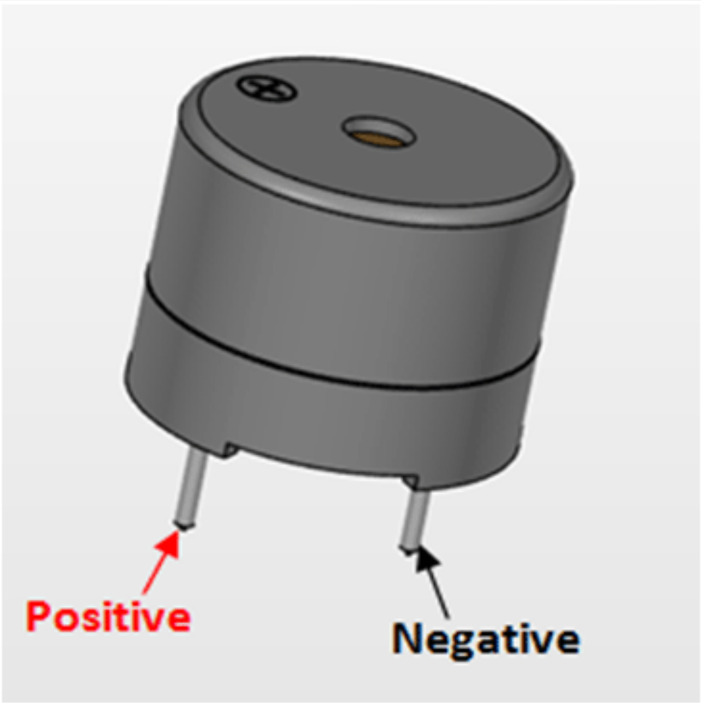

Passive Buzzer

Materials

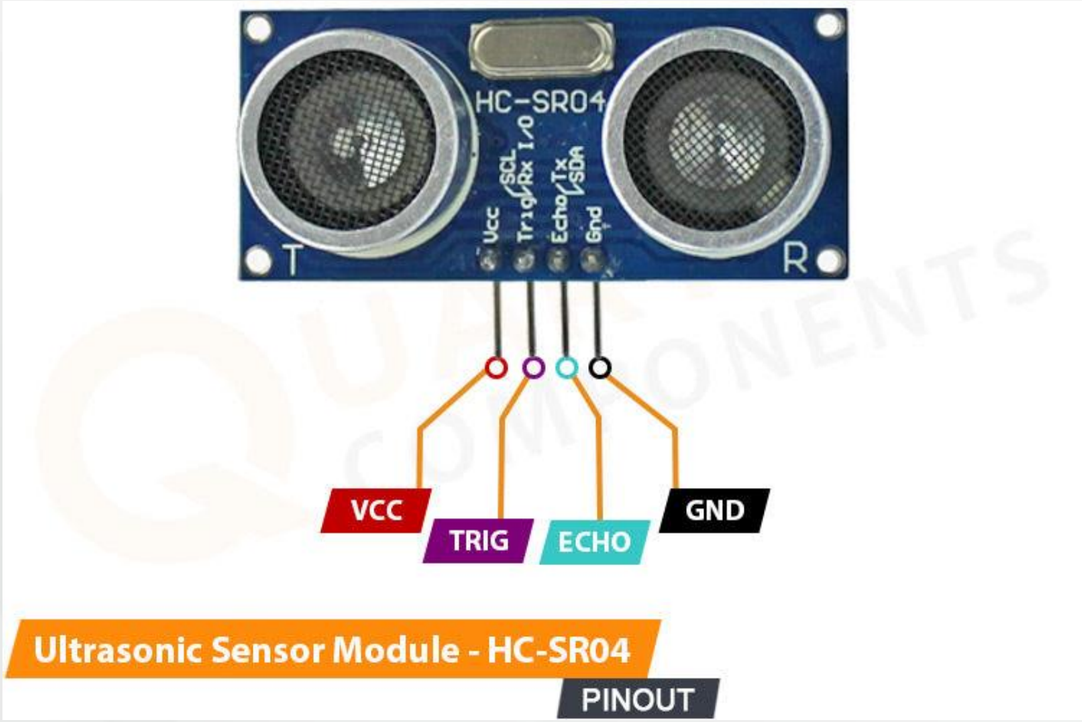

Ultrasonic sensor

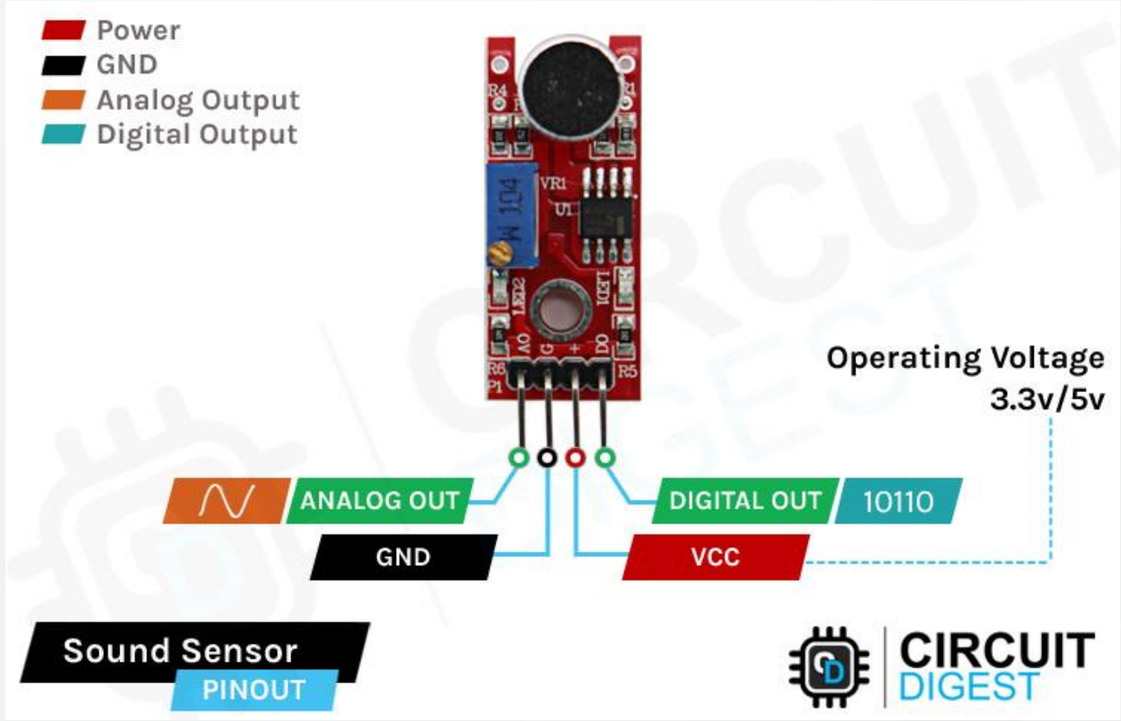

Sound sensor

Materials

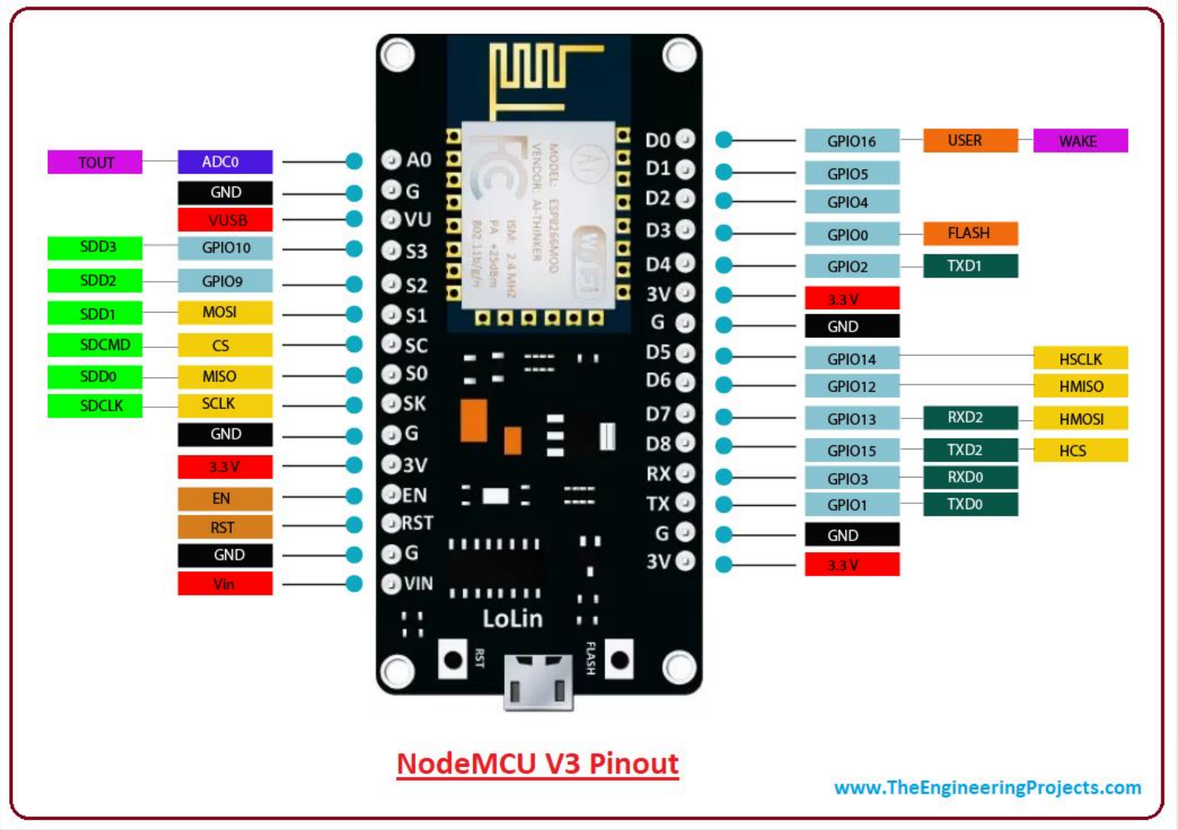

ESP8266 NodeMCU v3

Introduction

Experiment 2 will demonstrate how Internet of Things (IoT) technology can be used to remotely control and monitor home appliances using Arduino-based embedded systems. It integrates sensors, actuators, and cloud connectivity to enable automation and data analytics.

Key Technologies Involved:

- Cloud Integration: Real-time monitoring and data logging using **ThingSpeak.**
- Wireless Control: Command-based ON/OFF switching via IoT Dashboard.

MAPÚA UNIVERSITY

PROCEDURE

(Software, Hardware, Circuitry)

CPE162P-4_E01
EMBEDDED SYSTEM WITH IOT

MAPÚA UNIVERSITY

Software – Creation of Component Variable

Things > Untitled

Setup | Sketch | Metadata

Cloud Variables

ADD

Name	Last Value	Last Update
Buzzer `CloudFrequency buzzer;`	0	09 May 2025 10:43:27
LED `CloudLight lED;`	true	09 May 2025 10:48:28
ServoMotor `int servoMotor;`	65	09 May 2025 10:48:38
Soundsensor `int soundsensor;`	51	09 May 2025 10:48:56
Ultrasonic `float ultrasonic;`	102	09 May 2025 10:48:55

Associated Device

Agentrix

ID: 594cf01a-3cc5-4bc1-86f5-34519...

Type: NodeMCU 0.9 (ESP-12 Module)

Status: Offline

Change | Detach

Network

Wi-Fi Name: PLDTHO...

Password: ••••••••••...

Secret Key: ••••••••••...

Change

Smart Home integration

Configure your Thing to work with Amazon Alexa or Google Home

Configure

MAPÚA UNIVERSITY

Software – Initialization

```
#include "thingProperties.h"
#include <ThingSpeak.h>
#include <ESP8266WiFi.h>
#include <Servo.h>


// ThingSpeak settings
WiFiClient client;
unsigned long myChannelNumber = 2951584;
const char *myWriteAPIKey = "WFXIZMDBTGWHMSY6";

unsigned long lastUpdate = 0;
const unsigned long updateInterval = 15000;
Servo myServo;
long duration;
int distance;

```

Software – Setup

```
void setup() {
  Serial.begin(9600);
  delay(1500);
  pinMode(5, OUTPUT); // LED
  pinMode(4, OUTPUT); // Buzzer
  pinMode(A0, INPUT);
  pinMode(14, OUTPUT); //Trig Pin
  pinMode(12, INPUT); //Echo Pin
  myServo.attach(2); //Servo Motor

  initProperties();
  ArduinoCloud.begin(ArduinoIoTPreferredConnection);
  setDebugMessageLevel(2);
  ArduinoCloud.printDebugInfo();

  // Initialize ThingSpeak
  ThingSpeak.begin(client);
}
```

MAPÚA UNIVERSITY

Software – Setup

```
void setup() {
  Serial.begin(9600);
  delay(1500);
  pinMode(5, OUTPUT); // LED
  pinMode(4, OUTPUT); // Buzzer
  pinMode(A0, INPUT);
  pinMode(14, OUTPUT); //Trig Pin
  pinMode(12, INPUT); //Echo Pin
  myServo.attach(2); //Servo Motor

  initProperties();
  ArduinoCloud.begin(ArduinoIoTPreferredConnection);
  setDebugMessageLevel(2);
  ArduinoCloud.printDebugInfo();

  // Initialize ThingSpeak
  ThingSpeak.begin(client);
}
```

MAPÚA UNIVERSITY

Software – Loop

```
void loop() {
  ArduinoCloud.update();

  // Ultrasonic Sensor
  digitalWrite(14, LOW);
  delayMicroseconds(2);
  digitalWrite(14, HIGH);
  delayMicroseconds(10);
  digitalWrite(14, LOW);
  duration = pulseIn(12, HIGH);
  distance = duration * 0.034 / 2;
  ultrasonic = distance;
  Serial.println(distance);

  // Sound Sensor
  soundsensor = analogRead(A0);

  unsigned long currentMillis = millis();
  if (currentMillis - lastUpdate >= updateInterval) {
    lastUpdate = currentMillis;

    // Send data to ThingSpeak
    ThingSpeak.setField(1, lED);
    ThingSpeak.setField(2, buzzer);
    ThingSpeak.setField(3, ultrasonic);
    ThingSpeak.setField(4, servoMotor);
    ThingSpeak.setField(5, soundsensor);
```

```
    int x = ThingSpeak.writeFields(myChannelNumber, myWriteAPIKey);
    if (x == 200) {
      Serial.println("ThingSpeak update successful.");
    } else {
      Serial.print("ThingSpeak error: ");
      Serial.println(x);
    }
  }
}
```

Software – Variable State Changes Function

```
void loop() {
  ArduinoCloud.update();

  // Ultrasonic Sensor
  digitalWrite(14, LOW);
  delayMicroseconds(2);
  digitalWrite(14, HIGH);
  delayMicroseconds(10);
  digitalWrite(14, LOW);
  duration = pulseIn(12, HIGH);
  distance = duration * 0.034 / 2;
  ultrasonic = distance;
  Serial.println(distance);

  // Sound Sensor
  soundsensor = analogRead(A0);

  unsigned long currentMillis = millis();
  if (currentMillis - lastUpdate >= updateInterval) {
    lastUpdate = currentMillis;

    // Send data to ThingSpeak
    ThingSpeak.setField(1, lED);
    ThingSpeak.setField(2, buzzer);
    ThingSpeak.setField(3, ultrasonic);
    ThingSpeak.setField(4, servoMotor);
    ThingSpeak.setField(5, soundsensor);
```

```
    int x = ThingSpeak.writeFields(myChannelNumber, myWriteAPIKey);
    if (x == 200) {
      Serial.println("ThingSpeak update successful.");
    } else {
      Serial.print("ThingSpeak error: ");
      Serial.println(x);
    }
  }
}
```

MAPÚA UNIVERSITY

Software – IoT Dashboard

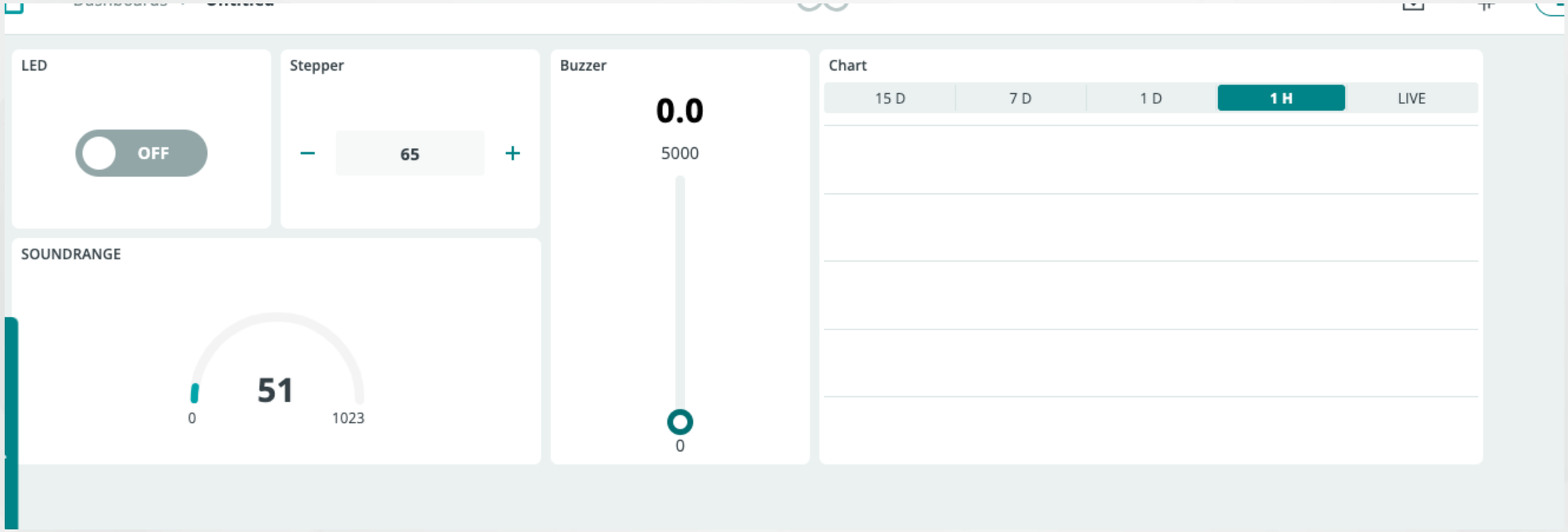

Hardware – Circuit Diagram

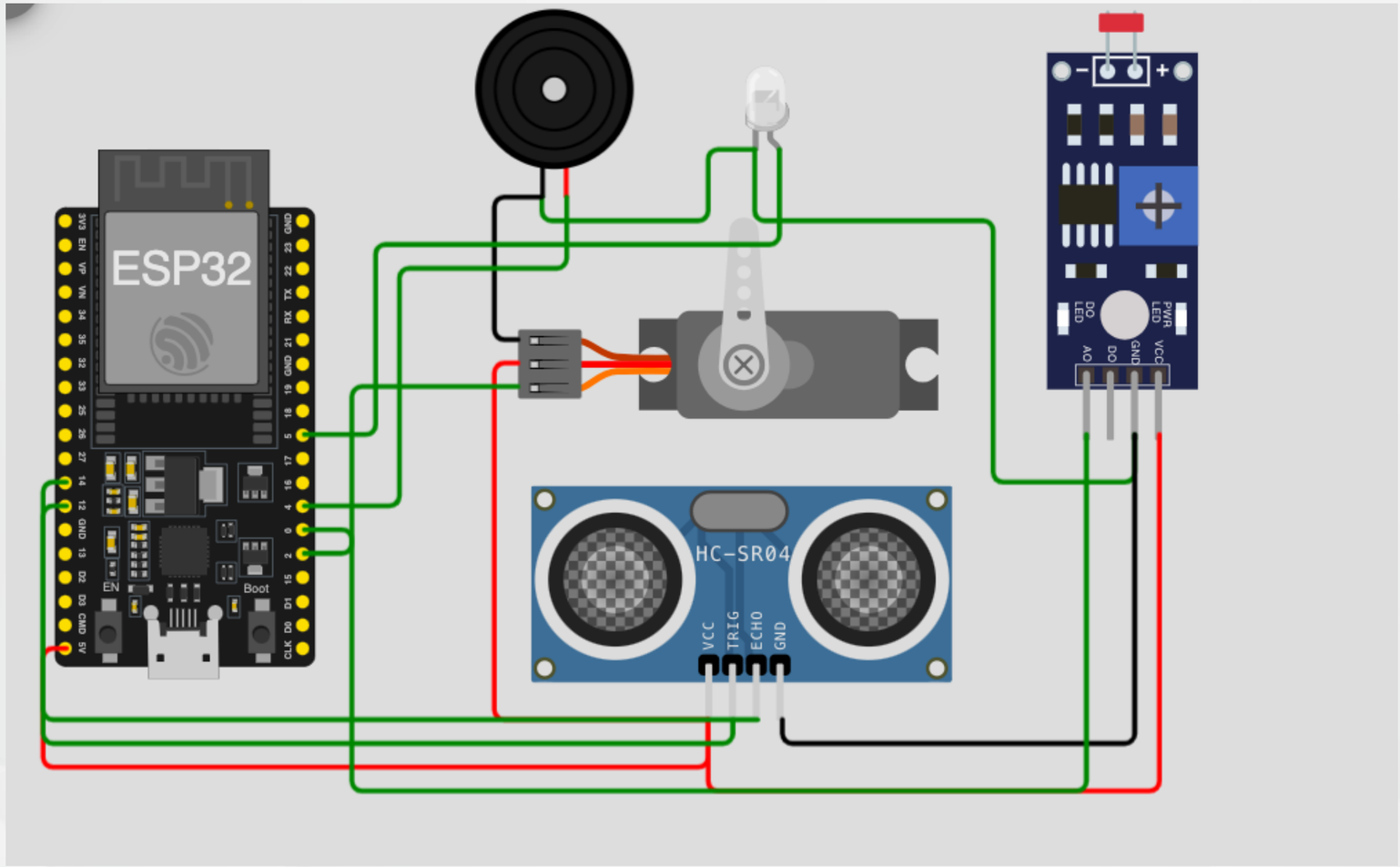

MAPÚA UNIVERSITY

Hardware – Circuit Diagram (Actual Implimentation)

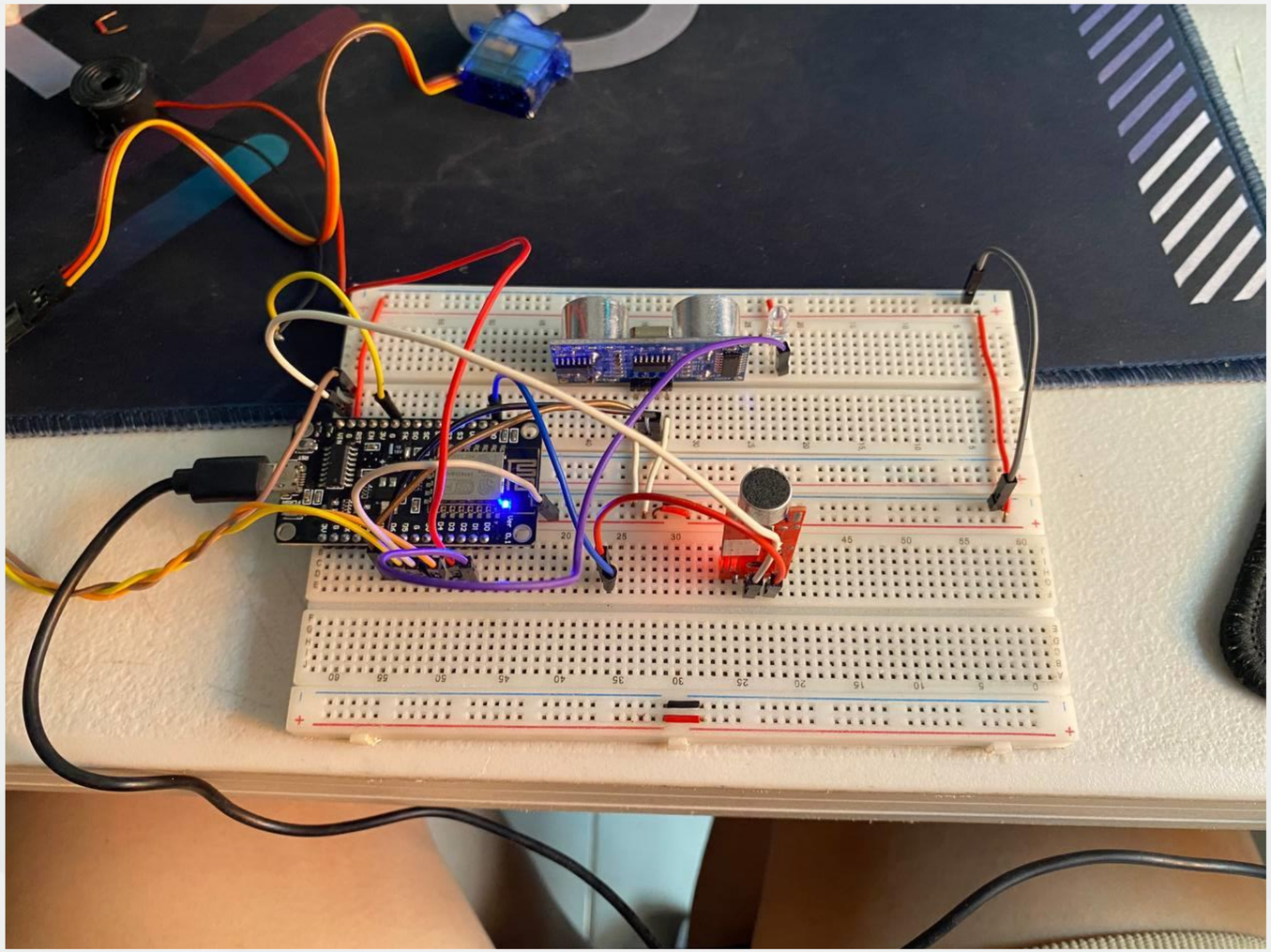

Sample Output

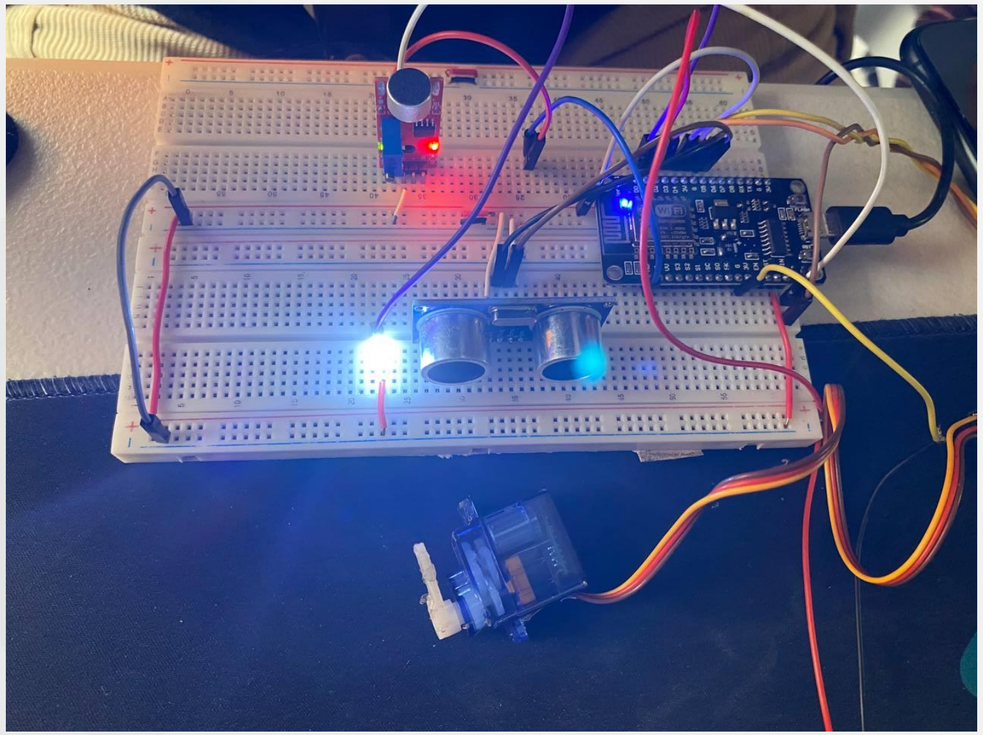

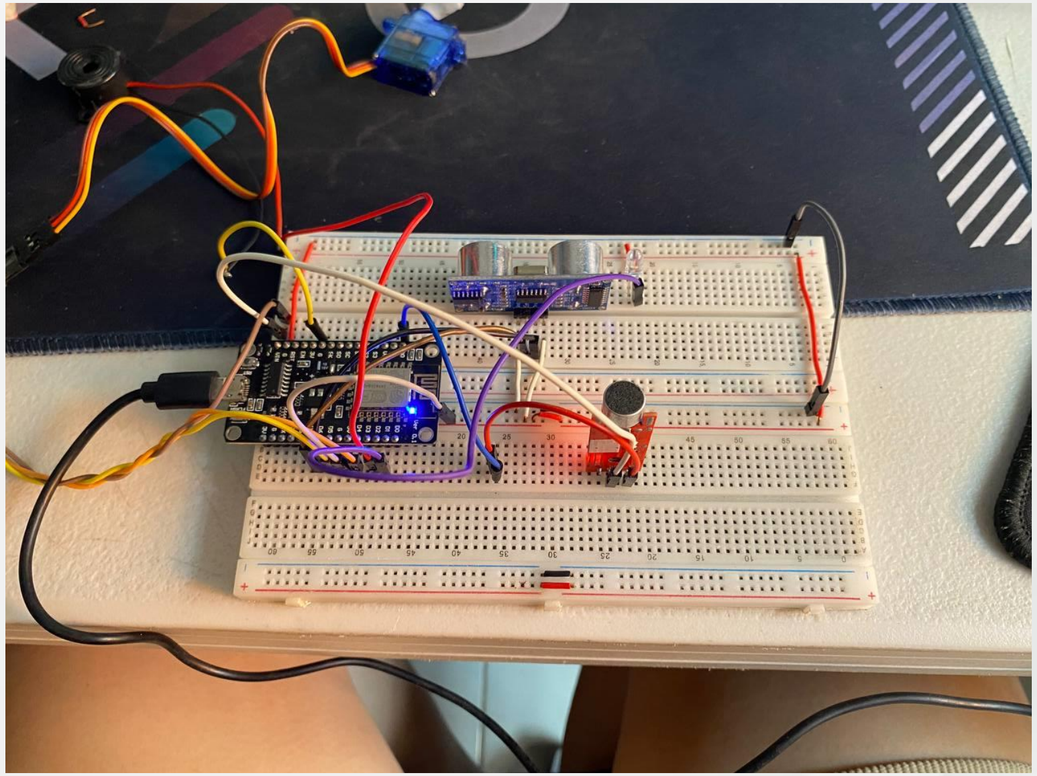

DEMONSTRATION

Link: https://youtu.be/ZjTeiLhzWrI

MAPÚA UNIVERSITY